General

Productgroup	PowerOne
Mounting type	Massive Pressfit Techn
Material	Brass
Surface	tin
Customs tariff number	85369095
Country of origin	Federal Republic of Germany
Weight per piecs ~	0.031710 kg

Technical data

Terminal / Type	Bush through hole / Metric
Thread/Diameter x Length	10.000 mm x 10.00 mm
Torque	17.00 Nm
Socket length x Socket width	16.000 mm x 16.00 mm
Socket height	3.00 mm
Height total	28.50 mm
Height over pcb	25.00 mm
No. of Pins	36
Pin length	3.50 mm
Grid dimension X / Y	2.54 mm / 2.54 mm
Pin alignment	Full plain

Processing

Press in force	1440 N up to 9000 N
Retention force	60-80 % of press-in force
Press-in speed	100 mm/min. up to 250 mm/min.
PCB thickness	1.60 mm up to 3.20 mm
Notice	

Current carrying capacity

Part (20°C) ~ / (85°C) ~	360.000 A / 216.000 A

Usage and storage

Temperature	-40°C up to +150°C
Storage	dry environment protected from weather conditions
Storage conditions	at +5°C up to +40°C, 75% RH, non-condensing

Accessories

Press in tool

Co-applicable documents

Powerelement Guidelines	Link to Powerelement Guidelines

Standard drill pattern

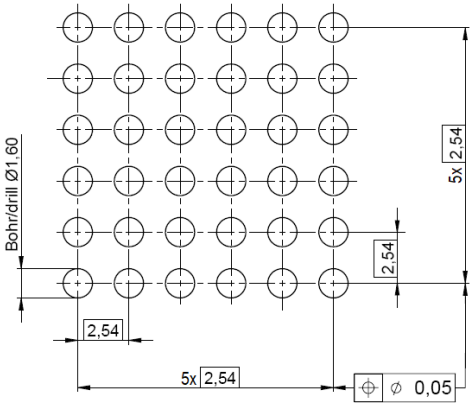

Drill hole specification for PCB

Drill Ø		drill tool drill hole	1,60 mm 1,60 mm - 0,025 mm
Cu		Cu – in Hole	Average 30 µm – 60 µm min. 25 µm, max. 80 µm *
End Ø		HAL chem. surfaces	(1,450 mm +/- 0,05 mm) (1,475 mm +/- 0,05 mm)

Note: For Press-fit Technology drill diameter and copper thickness are fix. End Ø for reference only.

* single measurement points in microsection

Dimensions

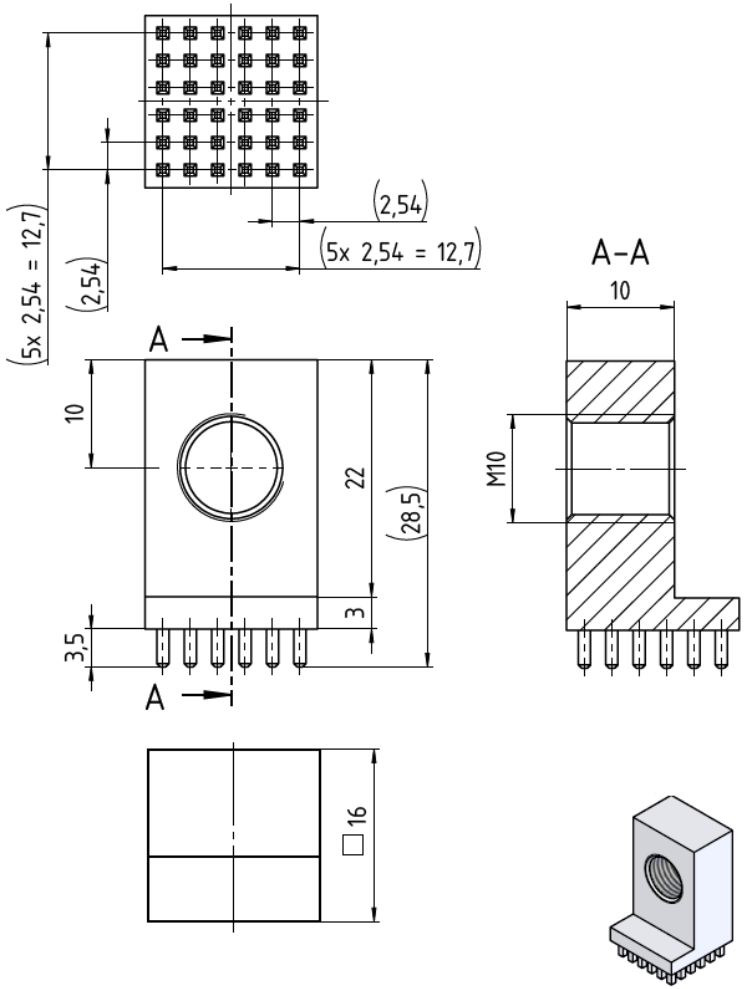

WÜRTH ELEKTRONIK MORE THAN YOU EXPECT

Würth Elektronik ICS GmbH & Co. KG
Würthstraße1 74676 Niedernhall, Germany
P +49 7940 9810-4444 powerelement@we-online.de
www.powerelement.com

Observe protective note ISO 16016. Passing on or duplication without previous written agreement forbidden. Violations oblige to compensation. All rights reserved in the event of a patent or utility model protection. Subject to change without notice! Is NOT subject to change service!

Generaltolerances	Projection mode
DIN ISO 2768-mH	

Revison	Date	All measures in
B	13.06.25	mm

Part no.

K91117

Description

PowerOne Bracket

REACH COMPLIANT

RoHS COMPLIANT